ALL DIMENSIONS ARE IN MM UNLESS STATED. ASK IF ANY DOUBT. | NO SHARP CORNERS | A3

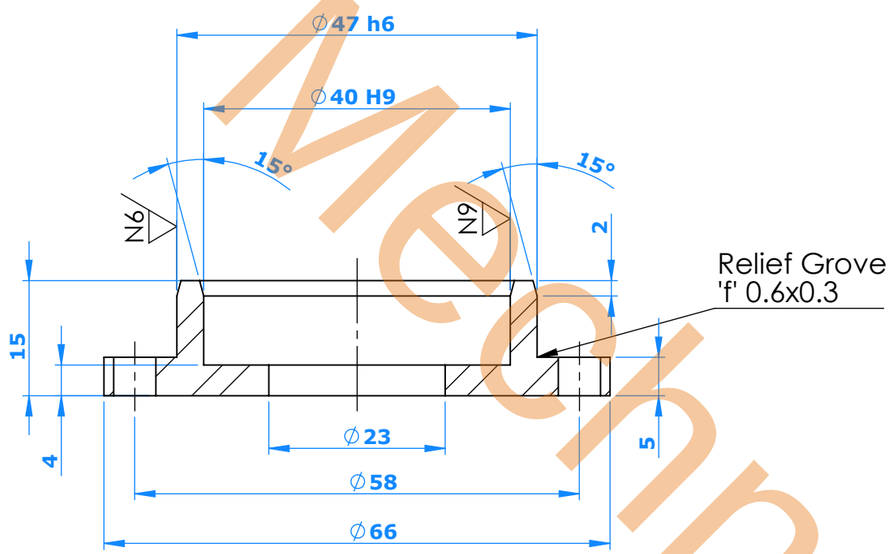

SECTION A-A

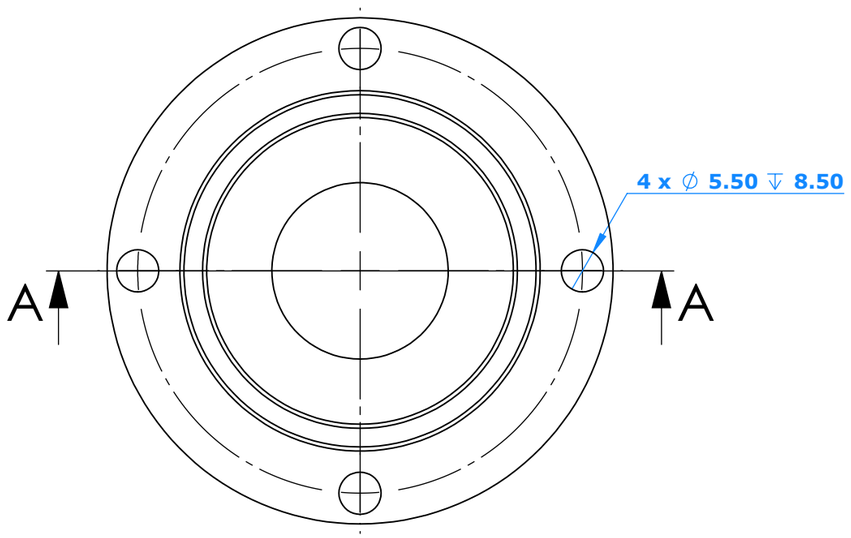

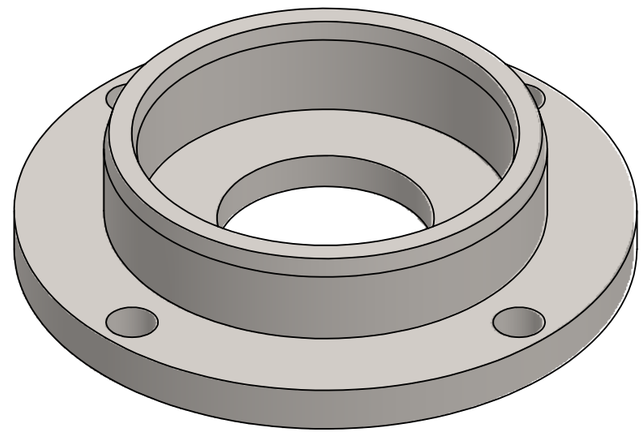

NOTE :
ALL MACHINED PART SHOULD BE BURR FREE
ALL UNSPECIFIED CHAMFER 1 X 45° AND FILLET 0.5mm

N11 (N6)

Nominal Tolerance		Tolerance As Per Std.						
M/Cg Deviation For Open Dimensions as per ISO 2768								
Dim.	Over	-	6	30	120	400	1000	2000
	Upto & Inc.	6	30	120	400	1000	2000	4000
Tolerance		± 0.1	± 0.2	± 0.3	± 0.5	± 0.8	± 1.2	± 2

Surface Roughness Symbol						
Sym	N12	N11	N9	N7	N6	N3
Val. µRa	50	25	6.3	1.6	0.8	0.1

Sr/No.	Description	Rev.	Name	Date:

QTY:	Raw Weight:	Finish Weight:	Heat Treatment / Surface Coating

Scale: NTS

	Name	Date:
Drawn		
Checked		
Approved		

Raw Material Size	
Material Designation	
Higher Assly No	

Assly/Part Description: **RING**

Assly/Part No:

Sheet No. 1 OF 1

Mechnexus.com

THIS DOCUMENT/DRAWING IS PROPERTY OF MECHNEXUS.COM AND MUST NOT BE COPIED OR MODIFIED IN ANY UNDER CIRCUMSTANCES UNLESS WITHOUT WRITTEN PERMISSION.